Outstanding Questions for Magnetic Reconnection in HED Plasmas

Hantao Ji

Princeton Plasma Physics Laboratory

Magnetic Reconnection in HEDLP Collaboration Meeting

Rochester, February 13, 2012

Outline

- Comments on magnetic reconnection in space and astrophysical plasmas
- Roles of laboratory experiments
- Outstanding questions and opportunities for magnetic reconnection research
- Possible contributions from magnetic reconnection research in HED plasmas

Types of Space and Astrophysical Plasmas

- Flow-dominated
  - Stellar interiors
  - Accretion disks
- Magnetically dominated
  - Stellar corona
  - Magnetospheres
- Intermediate state
  - Stellar winds
  - Interstellar media

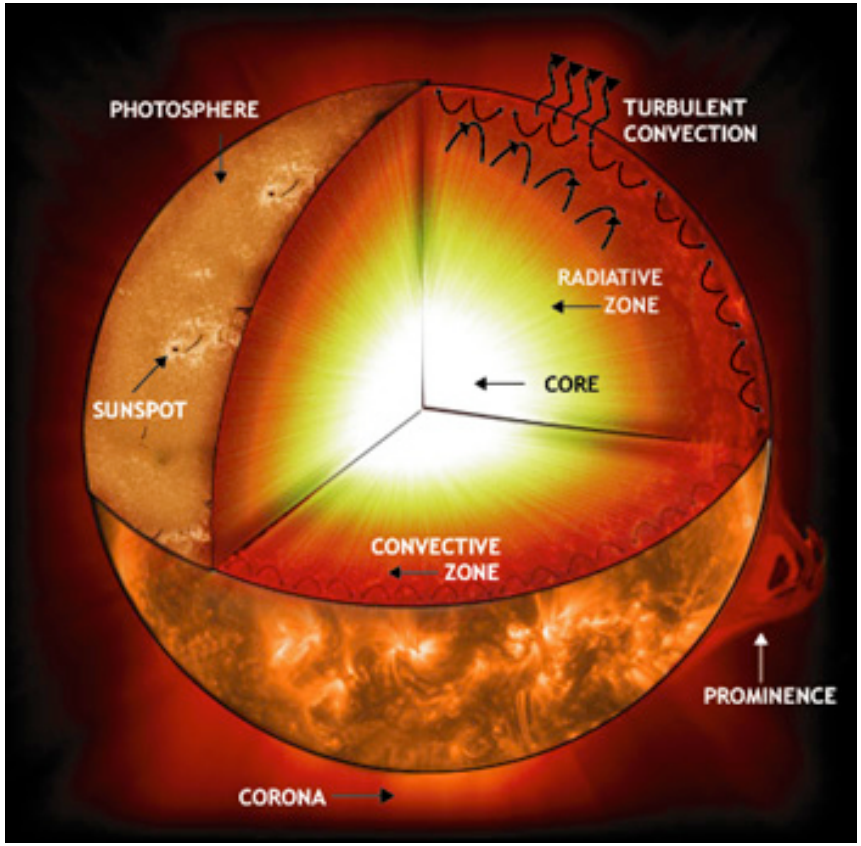

Sunspots (50,000km) Are Magnetic and Moves Towards Solar Equator

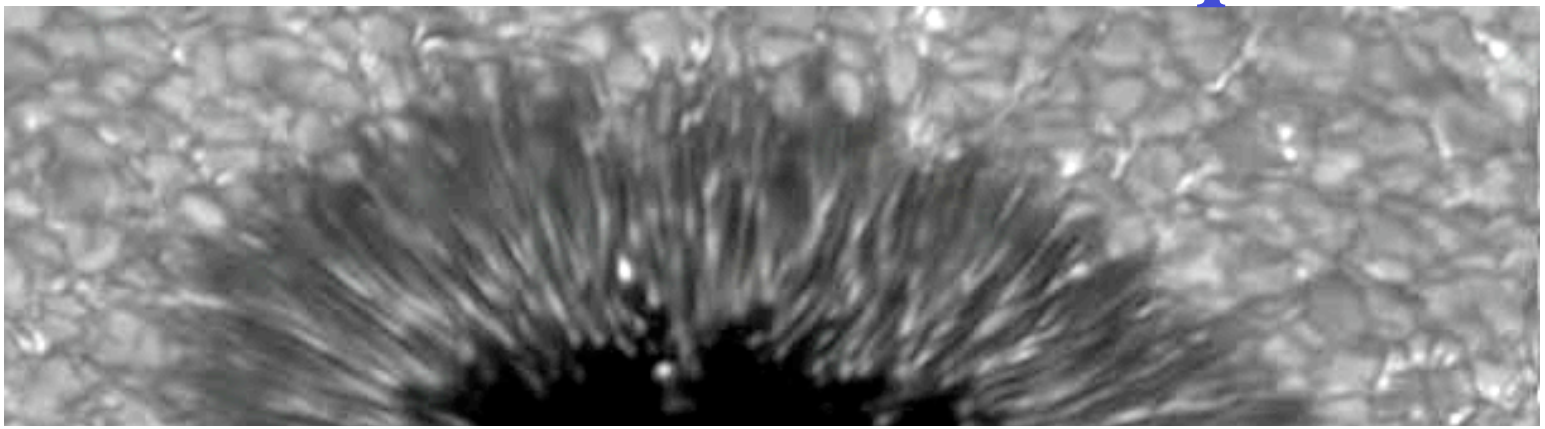

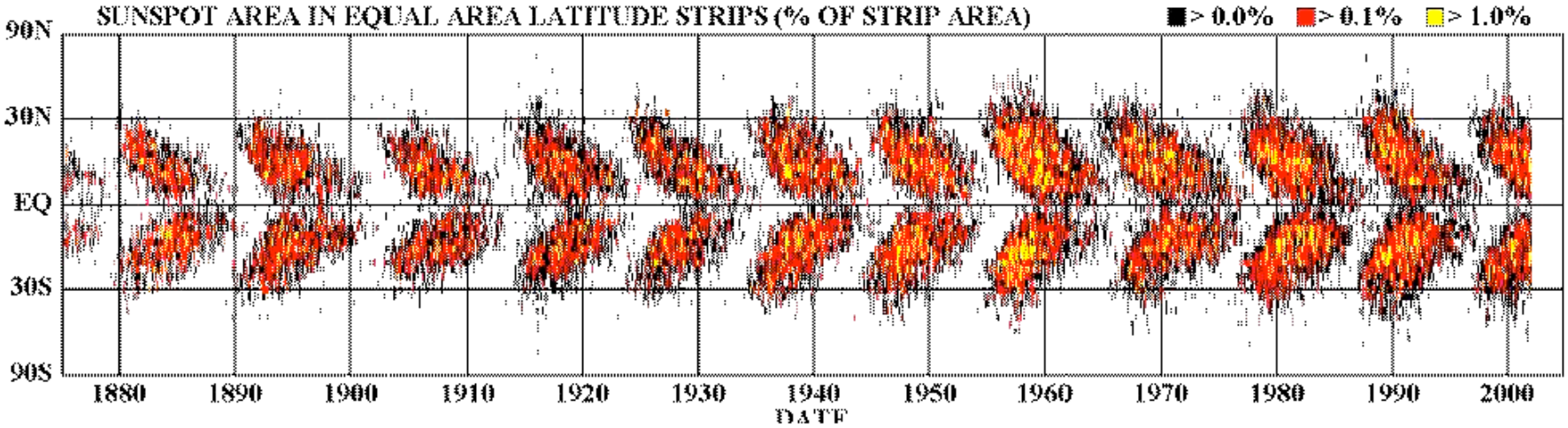

- What happens to these sunspots?

Granulation (1,000km)

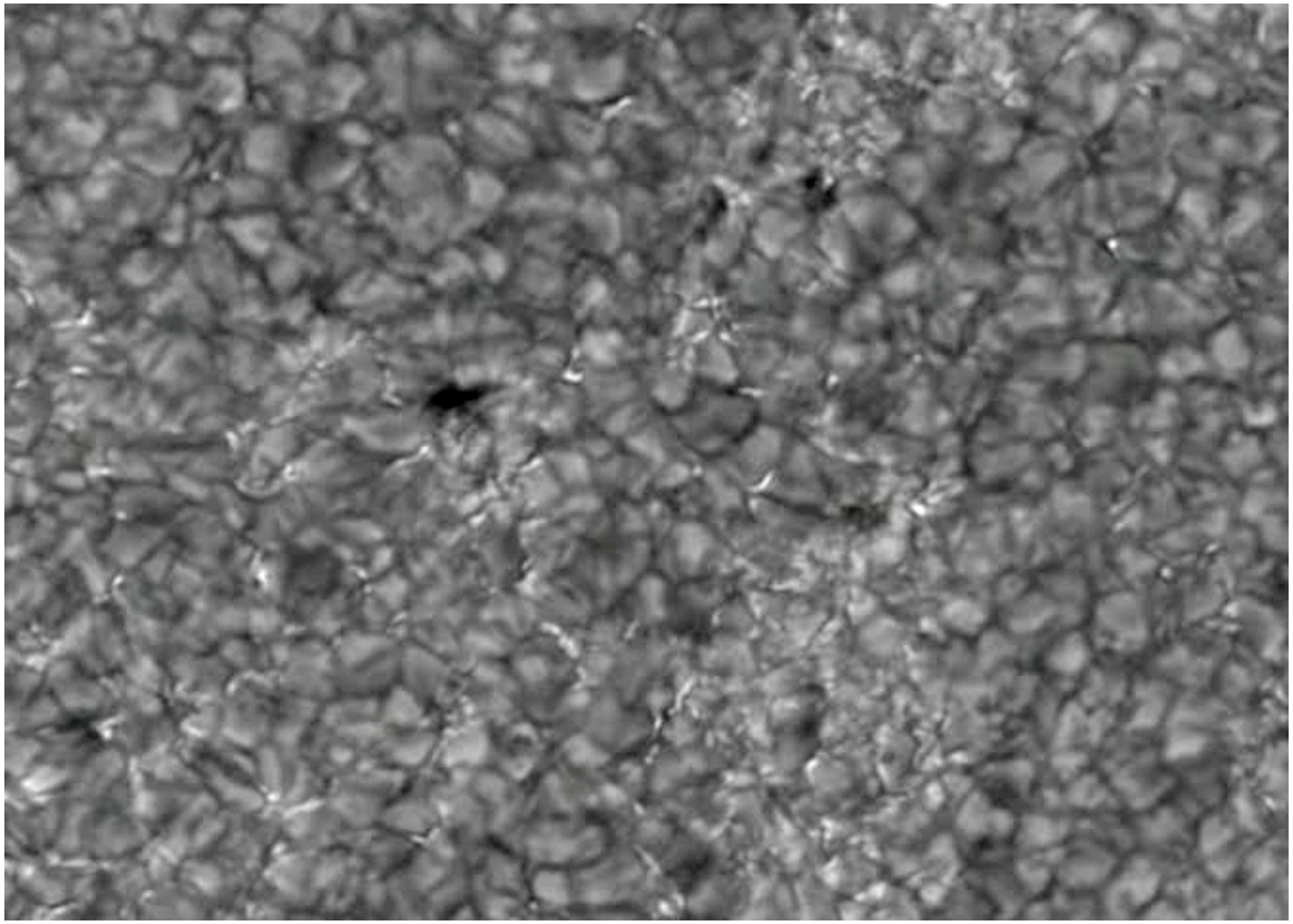

- What happens to these smaller magnetic fields?

Magnetic Reconnection is An Important Dissipation Mechanism Likely for All Types

- A large number of reconnection events are driven in MHD turbulence
- Reconnection dominates dissipation in low-beta regions in MRI turbulence

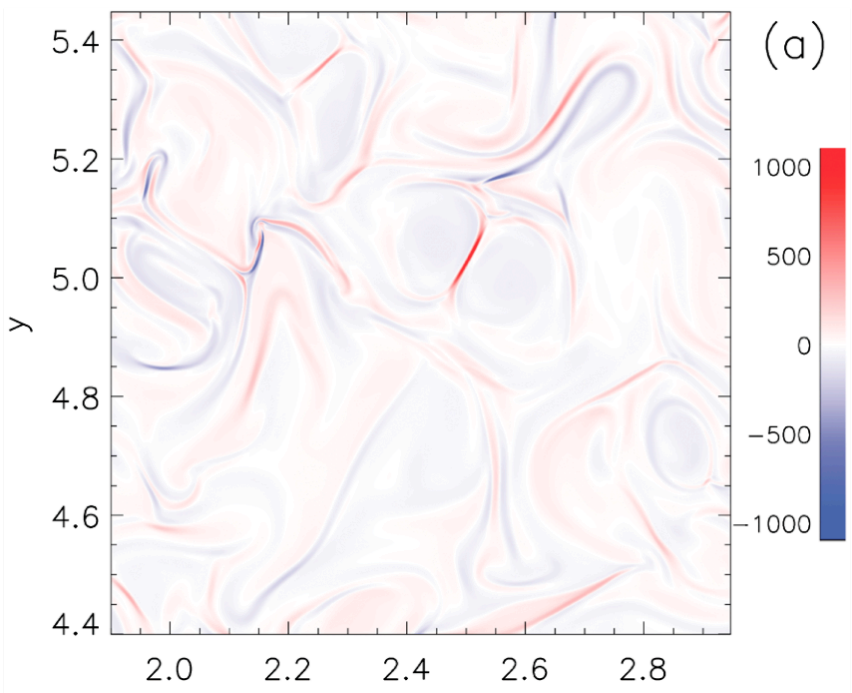

Servidio et al. (2009)

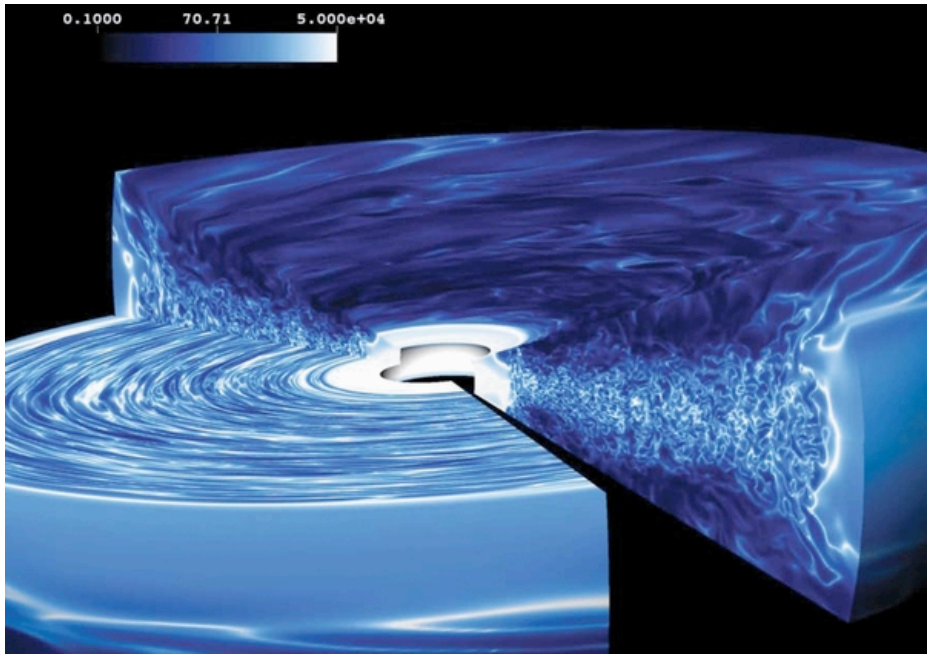

Flock et al. (2011)

Roles of Laboratory Experiments in Understanding Space/Astrophysical Plasmas

- **Laboratory plasma physics has advanced significantly in the past decades in terms of physics, technology, and diagnostics, with help from theory and modeling.**
- **Motivated by astrophysical observations**
- **Capable of providing *both* local in situ measurements and global morphology**
- **Test/confront theory**
- **Benchmark/challenge simulation; unique opportunity to validate codes**
- **Compare with observations**
- **Discover new physics**

Two Types of Experiments

- All-in-one: many competing processes coexist; difficult to differentiate
  - *e.g.* tokamaks

- Problem-specific: one process dominates
  - *e.g.* MRX for magnetic reconnection

Controllability is the key:

specify conditions, when, and where to observe how; diagnostics is the other key

What problems for magnetic reconnection?

Fundamental Reconnection Problems

- **How is reconnection rate determined?** ***(The rate problem)***
- **How does reconnection take place in 3D?** ***(The 3D problem)***
- **How does reconnection start?** ***(The onset problem)***
- **How are particles energized?** ***(The energy problem)***
- **How do boundary conditions affect reconnection process?** ***(The boundary condition problem)***
- **How to apply local reconnection physics to a large system?** ***(The scaling problem)***
- **How does reconnection take place in relativistic and strongly magnetized plasmas?** ***(The relativistic problem)***

Physics Questions Studied Experimentally

Problem	Experiment	Opportunities
Rate	TS-3/4, MRX	Partially ionized plasma
3D	LAPD, MRX, SSX, VTF	3D-null point
Onset	VTF	Global self-organization
Energy	3D-CS, LAPD, TS-3/4, MRX, SSX	Particle acceleration
Boundary	RSX, RWM, MRX, LAPD, Caltech	Non-periodic
Scaling	MRX	Larger parameter space
Relativity	Laser plasmas	?

What Are Major Opportunities?

Physics Questions Studied Experimentally

Problem	Experiment	Opportunities
Rate	TS-3/4, MRX	Partially ionized plasma
3D	LAPD, MRX, SSX, VTF	3D-null point
Onset	VTF	Global self-organization
Energy	3D-CS, LAPD, TS-3/4, MRX, SSX	Particle acceleration
Boundary	RSX, RWM, MRX, LAPD, Caltech	Non-periodic
Scaling	MRX	Larger parameter space
Relativity	Laser plasmas	?

Challenges for Magnetic Reconnection in Space and Astrophysical Plasmas

	Magneto-sphere	Solar corona	Solar tachocline	…
Size/ion skin depth or ion gyroradius	100-1000	10^7	10^11	
Lundquist #	10^15	10^13	10^9	

- **Effectively very large**
- **High Lundquist # (collisionless or collisional)**

Characteristics of Reconnection in Large-sized and High-S Plasmas

- **Impulsive**
- **Probably involving multiple X points and/ or 3D null points**
- **Release large amount of magnetic energy, often to energetic particles, in short time**
- **Part of global self-organization**

Recent work:

Loureiro et al. (2007)
Bhattacharjee et al. (2009)
Samtaney et al. (2009)
Daughton et al. (2009)
Cassak et al. (2009)
Uzdensky et al. (2010)
….

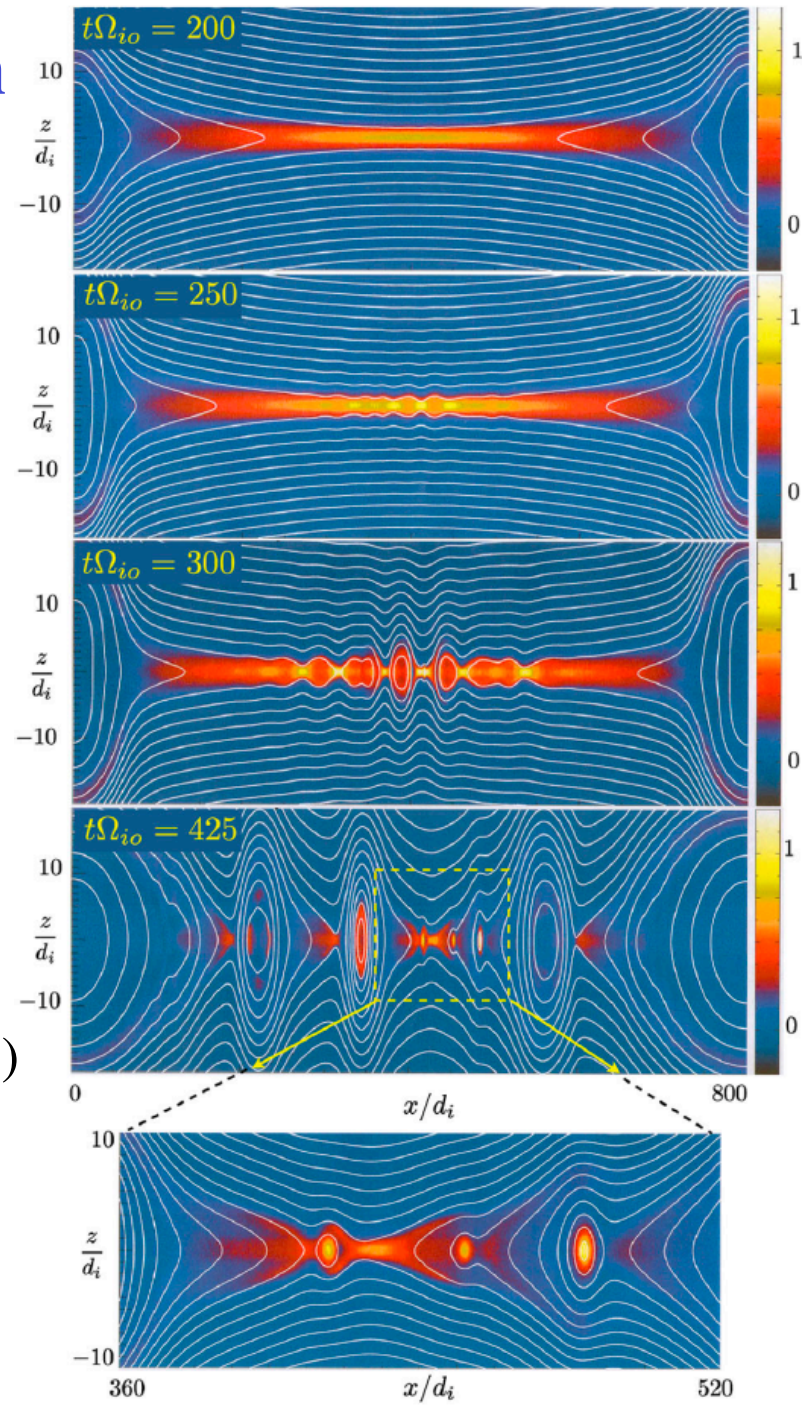

Reconnection "Phase Diagram"

Ji & Daughton (2011)

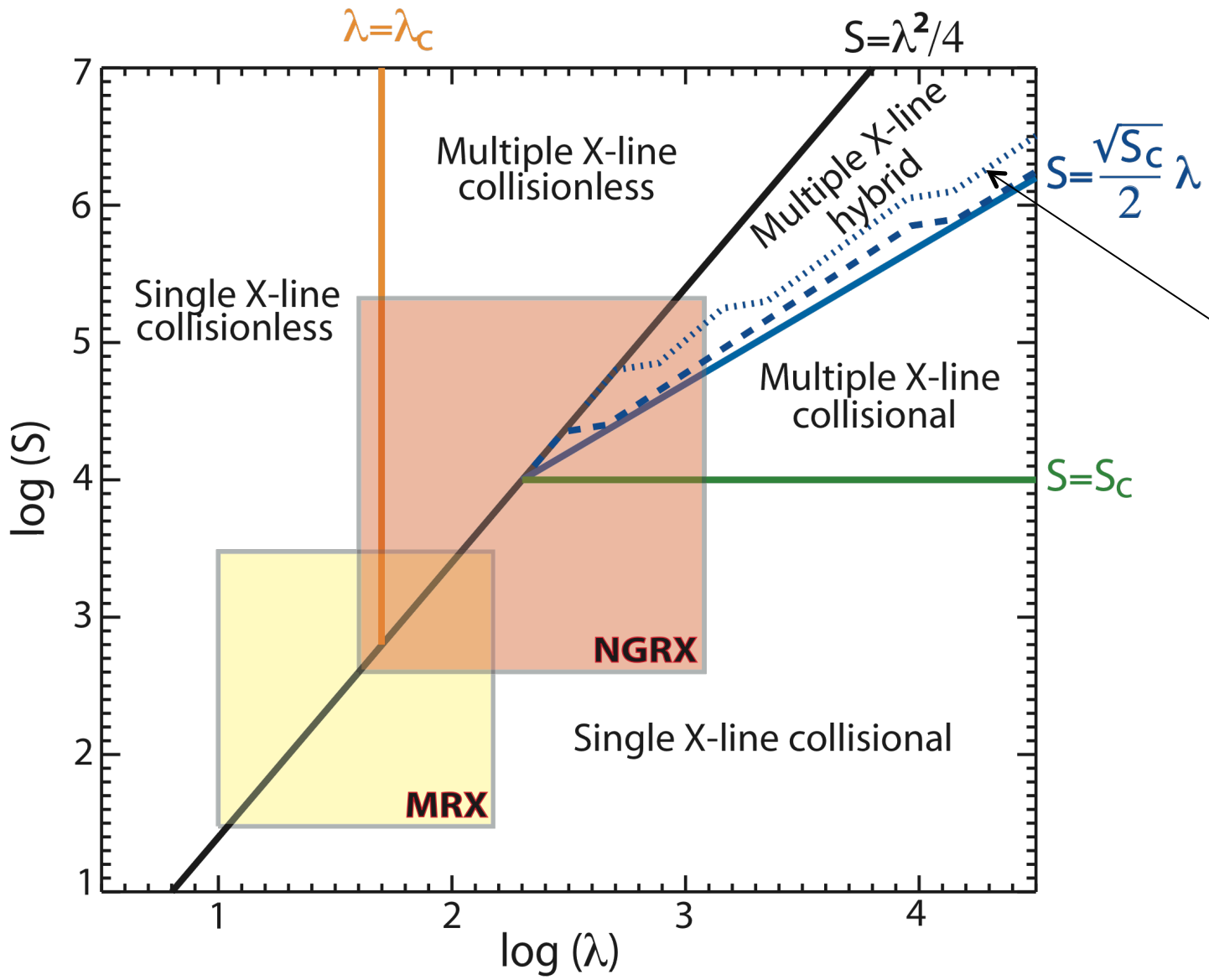

Island hierarchy truncated at N=2

$$\lambda \equiv \frac{L}{\rho_s}$$

New Phases Provide Access to Astrophysical Reconnection

Ji & Daughton (2011)

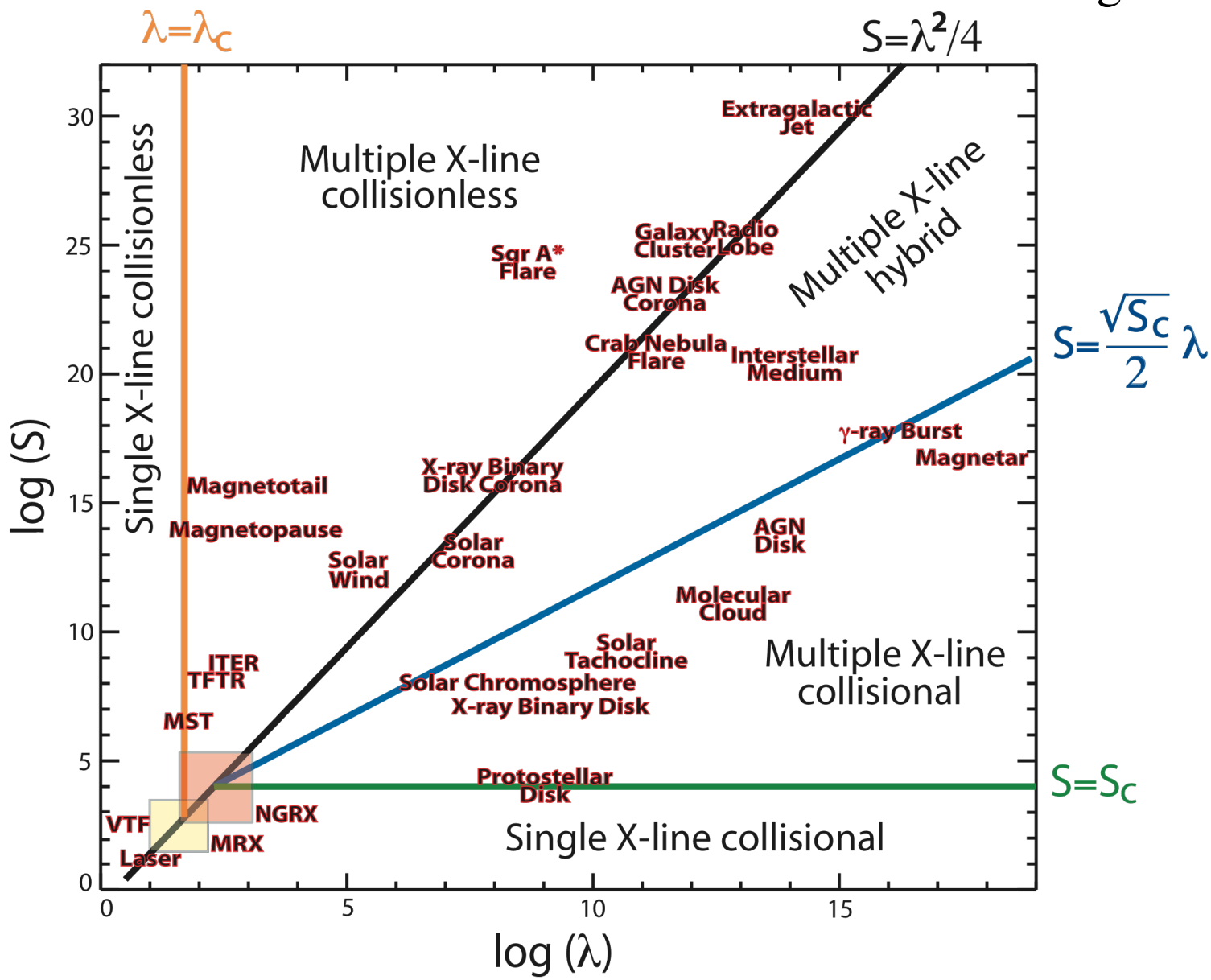

Multiple X-points Reconnection May *also* Provide A Solution of Efficient Particle Accelerations

- Observations suggest a significant fraction of energetic electrons (even ions) accelerated at reconnection side [e.g. *Krucker et al. (2010), Shih et al. (2009)*].
- Particle acceleration mechanisms suggested by multiple island interactions [e.g. Drake et al. (2006), Oka et al. (2010)].

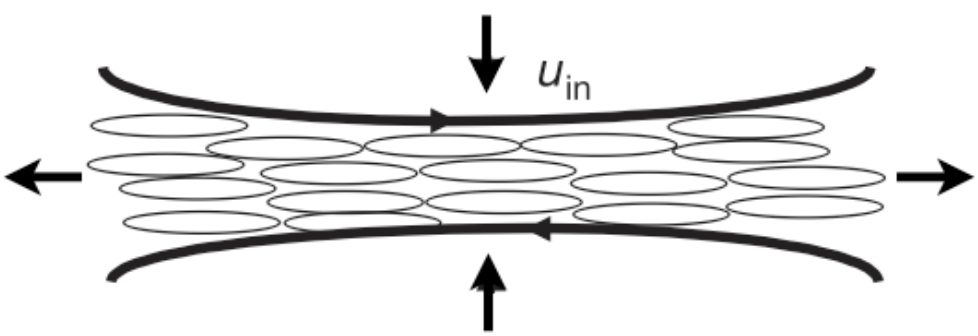

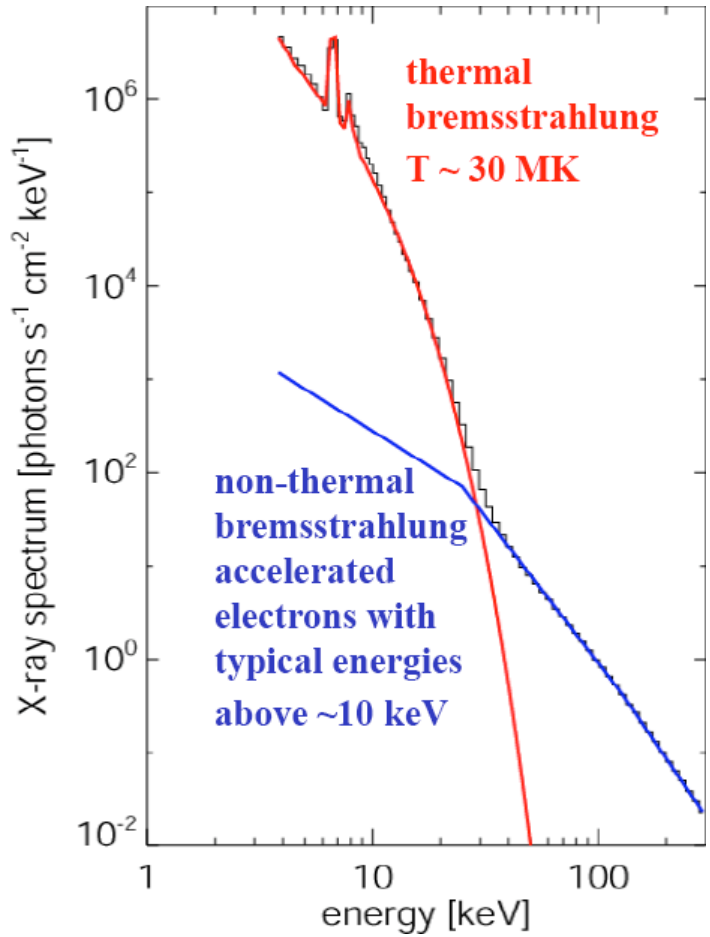

MRX-U Is Proposed to Access New Phases

Parameters	MRX	MRX-U
Device diameter	1.5 m	3 m
Device length	2 m	4 m
Flux core diameter	0.75 m	1.5 m
Stored energy	50 kJ	1 MJ
Plasma heating	No	OH (1MW) NBI (1MW) RF (25kW)

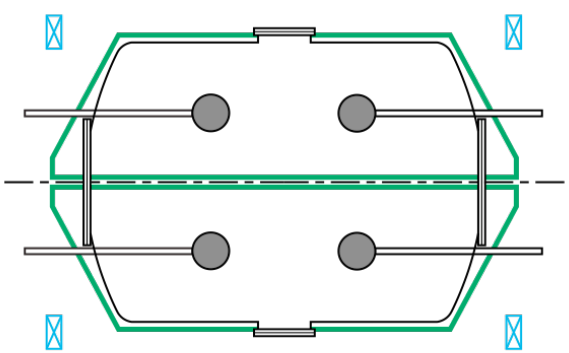

MRX

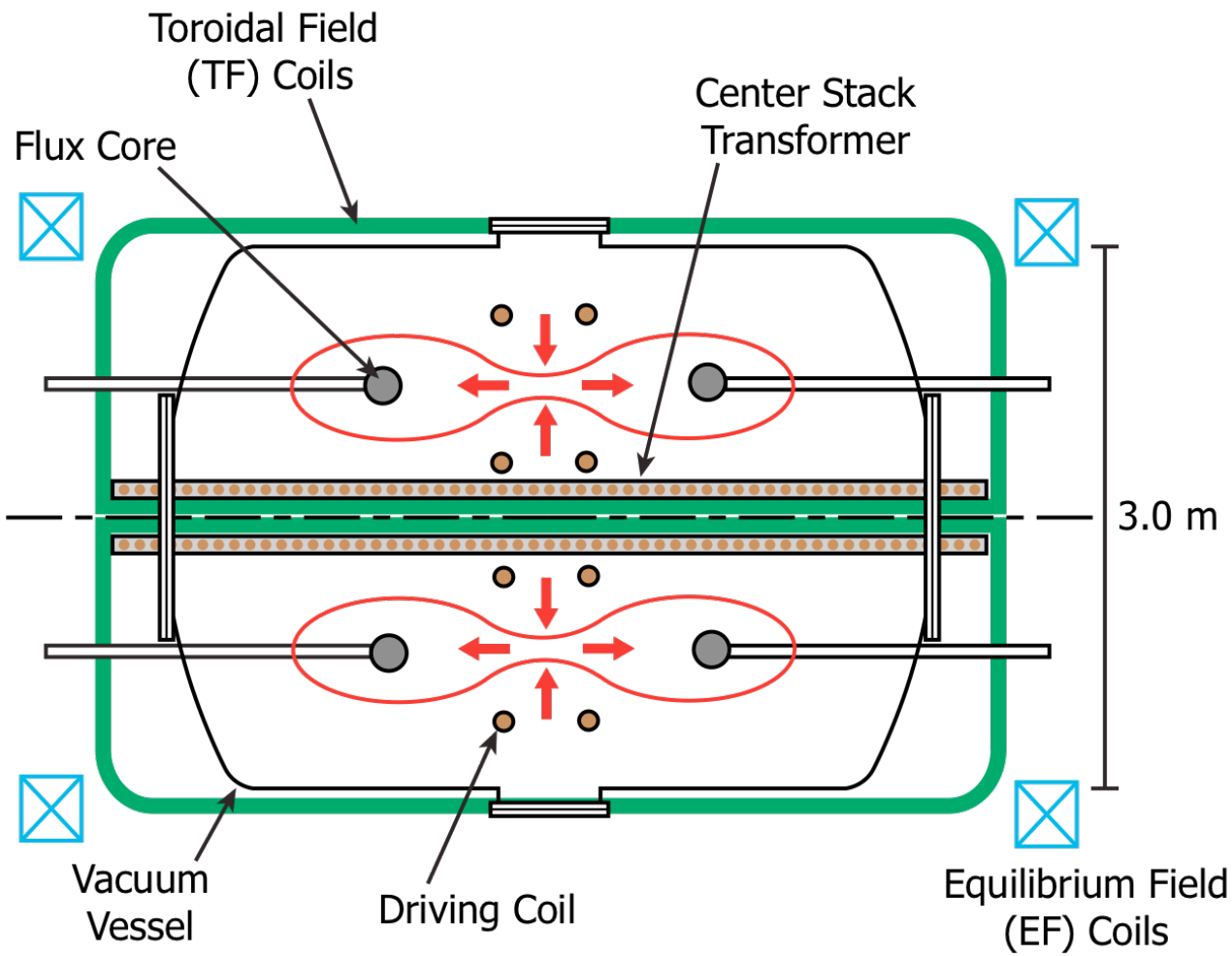

MRX-U

Conceptual Engineering Design Underway

Ellis et al.

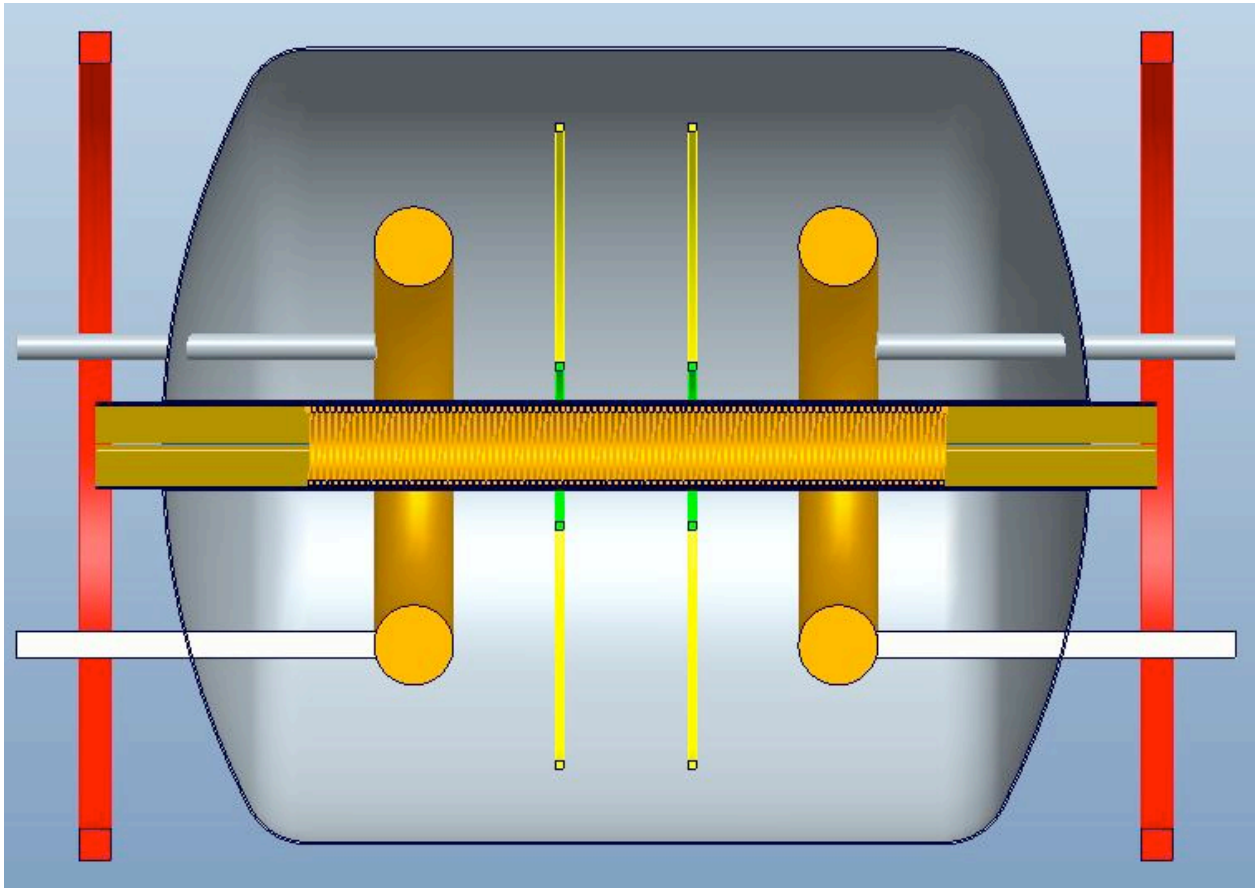

- Flux cores based on S-1 and MRX designs
- TF and OH in the center stack
- 2 pairs of driving coils, 1 turn, 50kA
- A pair of Equilibrium Field Coils; 16 turns, 13kA

- Vacuum vessel is stainless steel shell, 15mm thick.

Explorative Simulations Underway

Daughton et al.

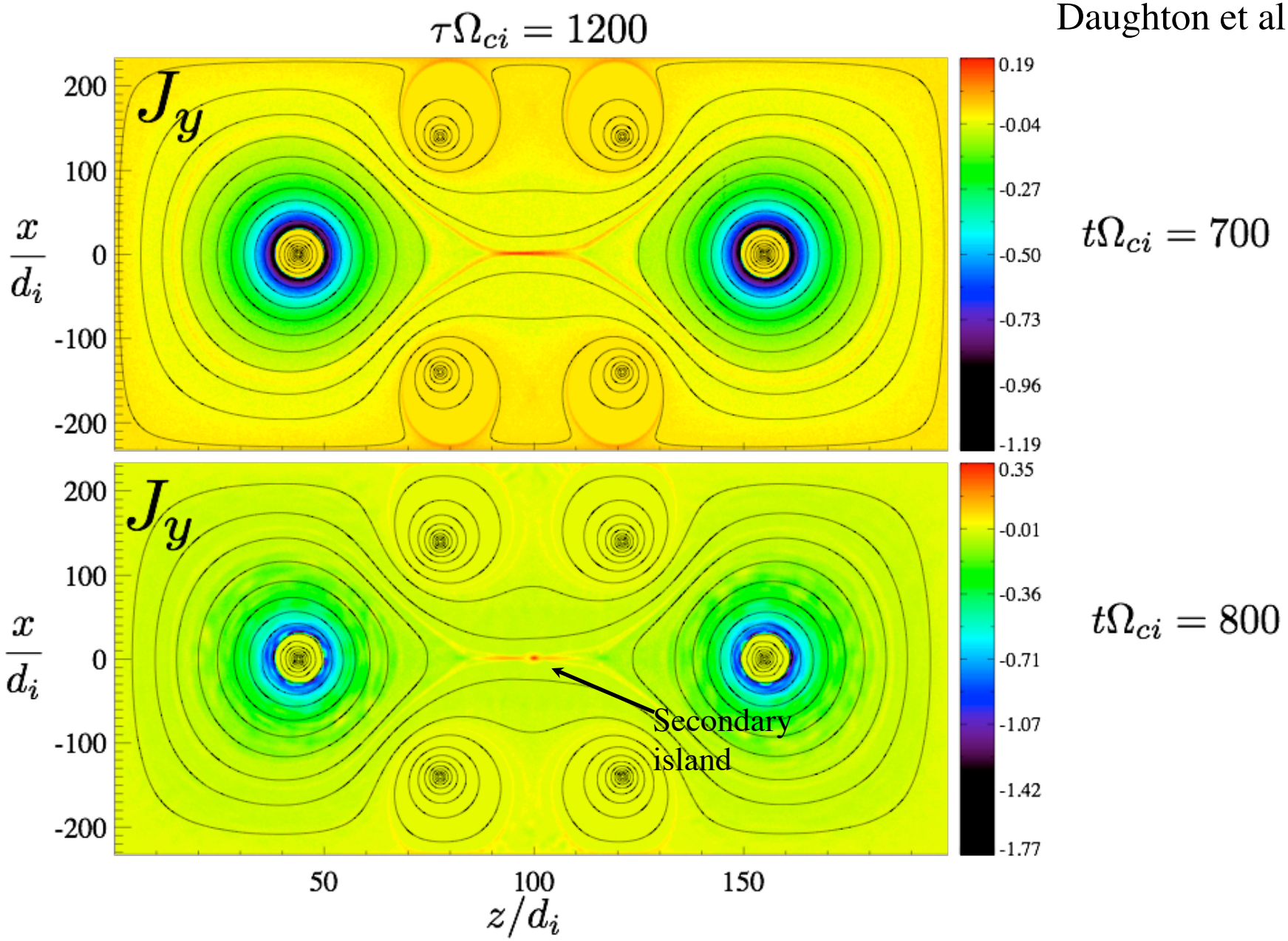

Another Major Opportunity?

Physics Questions Studied Experimentally

Problem	Experiment	Opportunities
Rate	TS-3/4, MRX	Partially ionized plasma
3D	LAPD, MRX, SSX, VTF	3D-null point
Onset	VTF	Global self-organization
Energy	3D-CS, LAPD, TS-3/4, MRX, SSX	Particle acceleration
Boundary	RSX, RWM, MRX, LAPD, Caltech	Non-periodic
Scaling	MRX	Larger parameter space
Relativity	Laser plasmas	Diagnostics

Proposed Reconnection Experiments at Omega EP Lasers

H. Ji, E. Blackman, C. Ren, P. Nilson, et al. (2011)

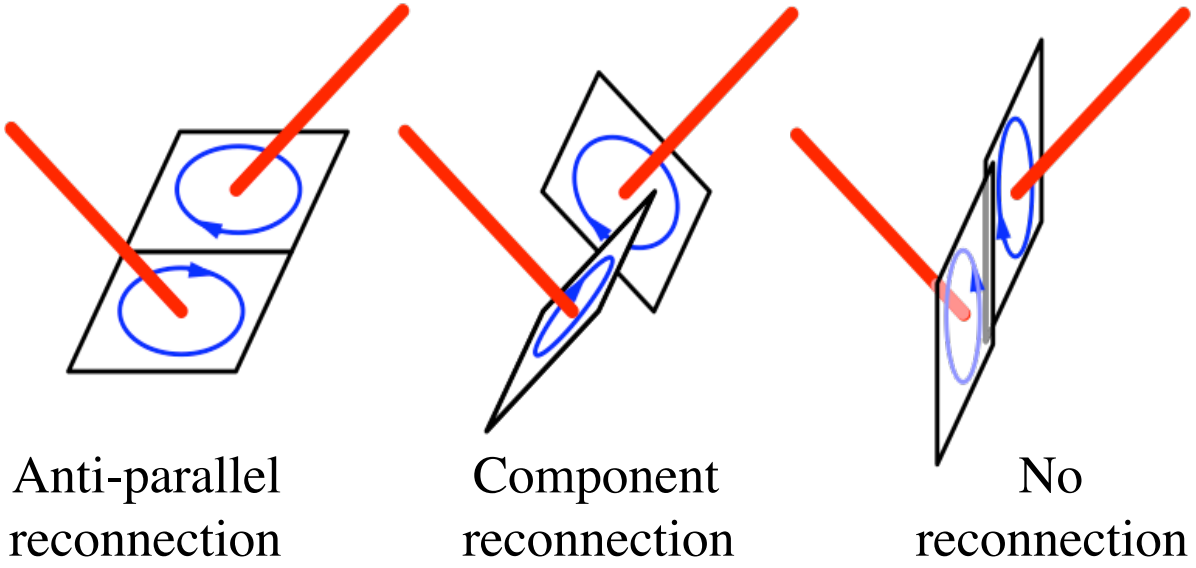

Questions to be investigated:

- What are ion and electron angle distributions and energy spectra?
- What are effects due to system size and plasma beta?
- What are effects due to relativity and radiative cooling?
- What are the structures of "reconnection region" (vs shocks)?

X-Ray Imaging Using Spherical Crystals

K. Hill, M. Bitter, et al. (PPPL)

- Crystal Spectrometers have been successfully used in many tokamaks to measure spatially resolved fine line shapes in X-ray

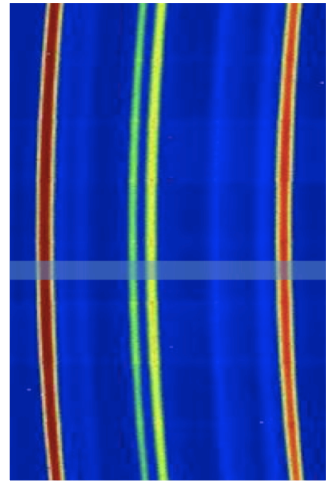

C-Mod tokamak

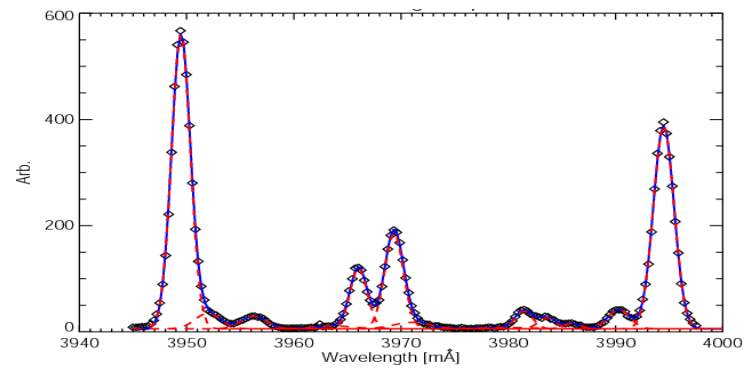

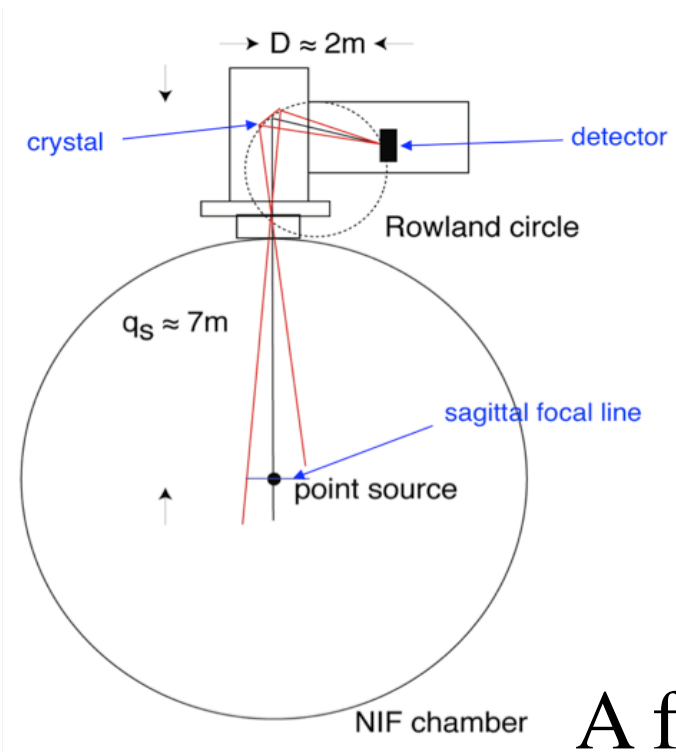

- 1D X-ray imaging with spherical crystals can provide high spectral resolution ($\lambda/d\lambda > 5000$) and high spatial resolution of microns
- 2D stigmatic imaging with 2 spherical crystals offers significant improvements in geometry and throughput

A follow-up meeting will be planned

Summary

- Magnetic reconnection is a major plasma physics process important to space and astrophysical plasmas

- Well-controlled and well-diagnosed laboratory experiments can contribute significantly to reconnection research.

- MRX-U is proposed as a major opportunity to study reconnection at larger size (~10×) and higher S (~100×).

- Laser plasma experiments can contribute to reconnection research by providing accesses to unique parameters (flow-dominated, relativity, radiation…) and new information (particle diagnostics, X-ray imaging on electron scales…)